IK E10.1-SVC2 MK2

HELIX IMPACT K-SERIES

250MM / 10INCH SUBWOOFER
1X2Ω PORTED ENCLOSURE

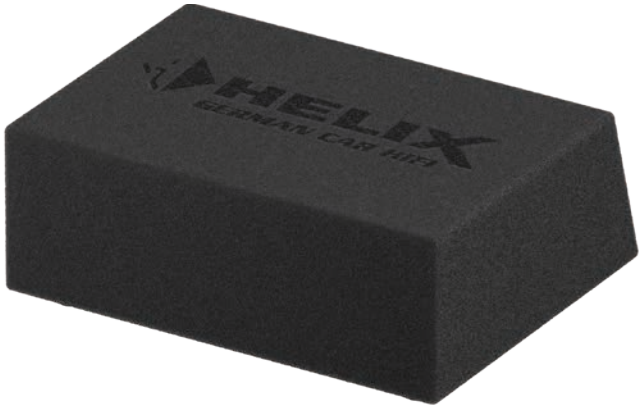



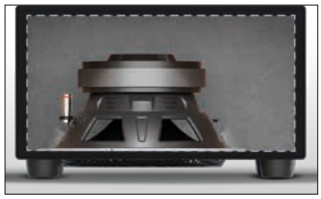



- Downfire enclosure for ideal bass dispersion in the vehicle and perfect protection of the speaker
- Compact ported enclosure design ensures high sound pressures and allows space-saving integration in the vehicle
- Equipped with one powerful 250 mm / 10” subwoofer with hand-scooped paper cone for rich, deep bass
- Chassis with 1 x 2 Ohms single voice coil for maximum power output of the amplifier
- Connection terminal with pluggable screw and additional Molex connector for use with conventional speaker cables or custom wiring harnesses – allows quick and secure installation and removal
- Feet with Velcro tape for a secure stand in the vehicle
- Sturdy carpet surface with embroidered HELIX logo

Technical data

Technische Daten

Power handling *Belastbarkeit*	*RMS*	300 W
Recommended amplifier power *Empfohlene Verstärkerleistung*	*RMS*	150 - 300 W
Impedance *Impedanz*	*Z*	1 x 2 Ω
Max. linear excursion *Max. linearer Membranhub*	*Xmax*	+/- 8 mm
Max. linear excursion *Max. linearer Membranhub*	*Xmax*	+/- 18,5 mm
Port tuning frequency *Tunnelabstimmungsfrequenz*	*Fb*	43 Hz
Sensitivity *Wirkungsgrad*	*SPL*	93 dB @ 2.83V / 1m 87 dB @ 1W / 1m
Dimensions (H x W x D) *Abmessungen (H x B x T)*		187 x 470 x 375 mm 7.4 x 18.5 x 14.8"
Integrated subwoofer chassis *Verbautes Subwoofer-Chassis*		HELIX IK W10-SVC2

Recommended DSP settings

Empfohlene DSP Einstellungen

Highpass filter *Hochpassfilter*	"Self-Define": 37 Hz / Q = 1.5
EQ filter *EQ-Filter*	115 Hz / Q = 0.7 / -2 dB

Overview of the DSP settings made in the Audiotec Fischer DSP PC-Tool /
Übersicht über die vorgenommenen DSP-Einstellungen im Audiotec Fischer DSP PC-Tool

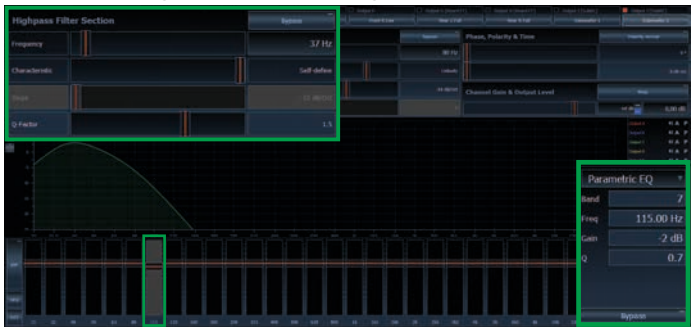

AUDIOTEC FISCHER
AUDIOTEC FISCHER GmbH
Hünegräben 26 - 28
57392 Schmallenberg
Germany

IK E10.1-SVC2 MK2

HELIX IMPACT K-SERIES

Dimensions
Abmessungen

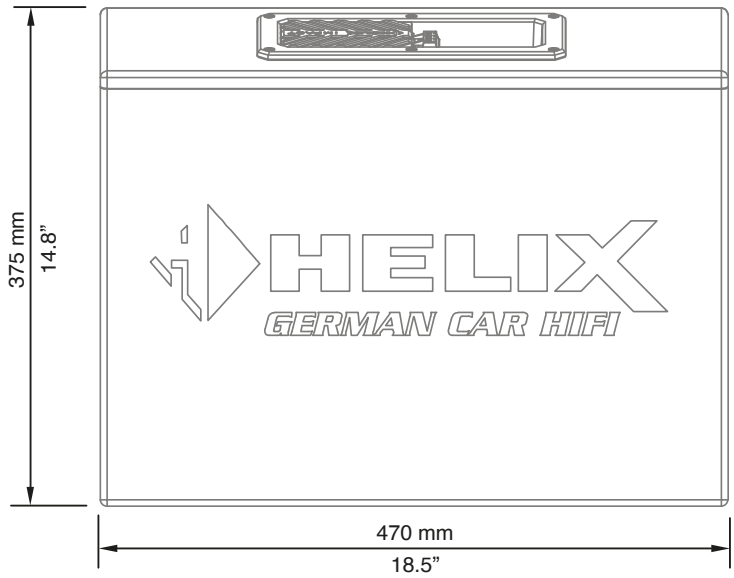

Top view

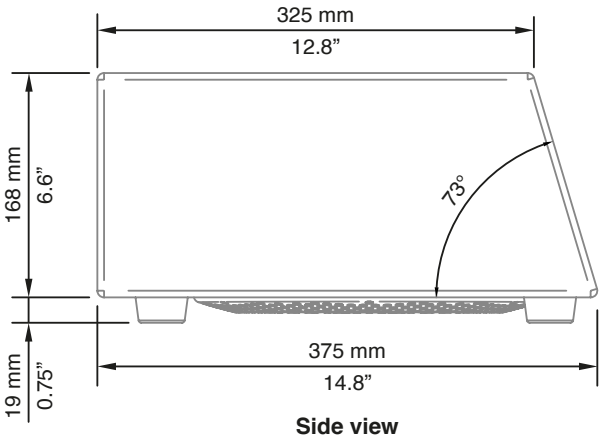

Side view

Wiring configurations
Anschluss

Connection options subwoofer
Anschlussmöglichkeiten Subwoofer

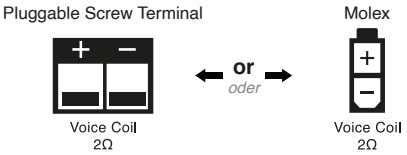

1 x 2 Ω configuration on one amplifier channel
1 x 2 Ω Konfiguration an einem Verstärkerkanal

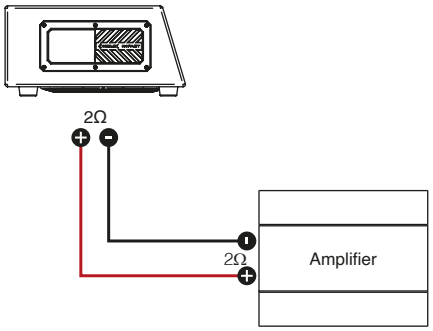

AUDIOTEC FISCHER
AUDIOTEC FISCHER GmbH
Hünegräben 26 - 28
57392 Schmallenberg
Germany